DRAWING FOR 35x35x50, COATED D/S, 3000LBS (NON-BAFFLE)

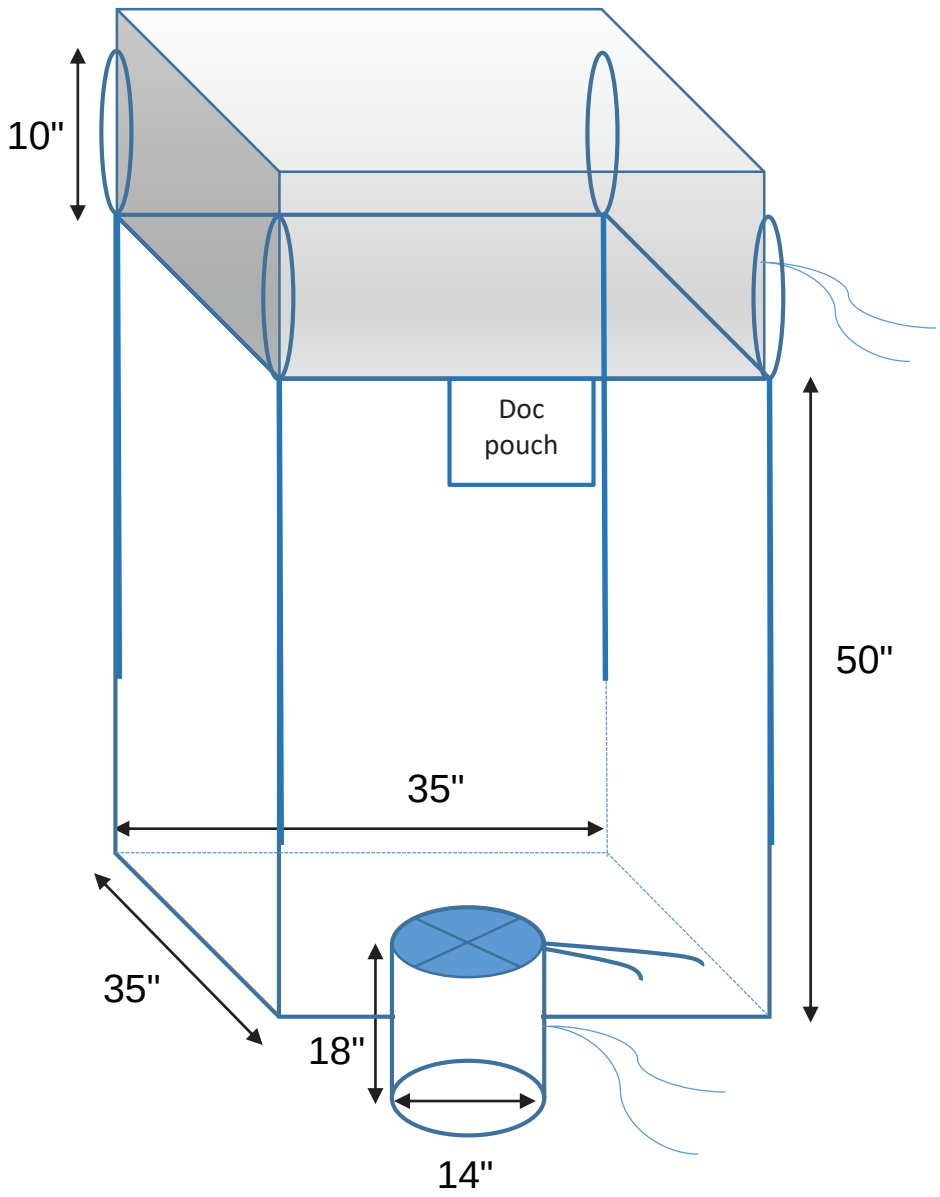

Bag Dimensions:	35x35x50 (Inner Size - LxWxH)
Safe Working Load/Safety Factor:	3000 lbs. 5:1
Bag Construction:	U-Panel
Body Fabric:	5 oz. (170 gsm) Uncoated, White
Top:	Duffle
Top Fabric:	3 oz. Coated
Top Tie:	Flat PP Tie Tape
Bottom Spout:	14" Diameter x 18" Height
Bottom Spout Fabric:	3 oz. Coated
Bottom Spout Tie:	PP Rope
Bottom Closure:	Iris Closure
Bottom Closure Tie:	PP Rope
Lifting Loops:	4 Corner Loops, 10" Free Height & 2" Width
Sift Proof Seams:	No
Document Pouch:	12"x16" Ziplock
Seams:	Over-lock Plus Safety