DRAWING FOR 40X48X60, S/S, 3000LBS (BAFFLES)

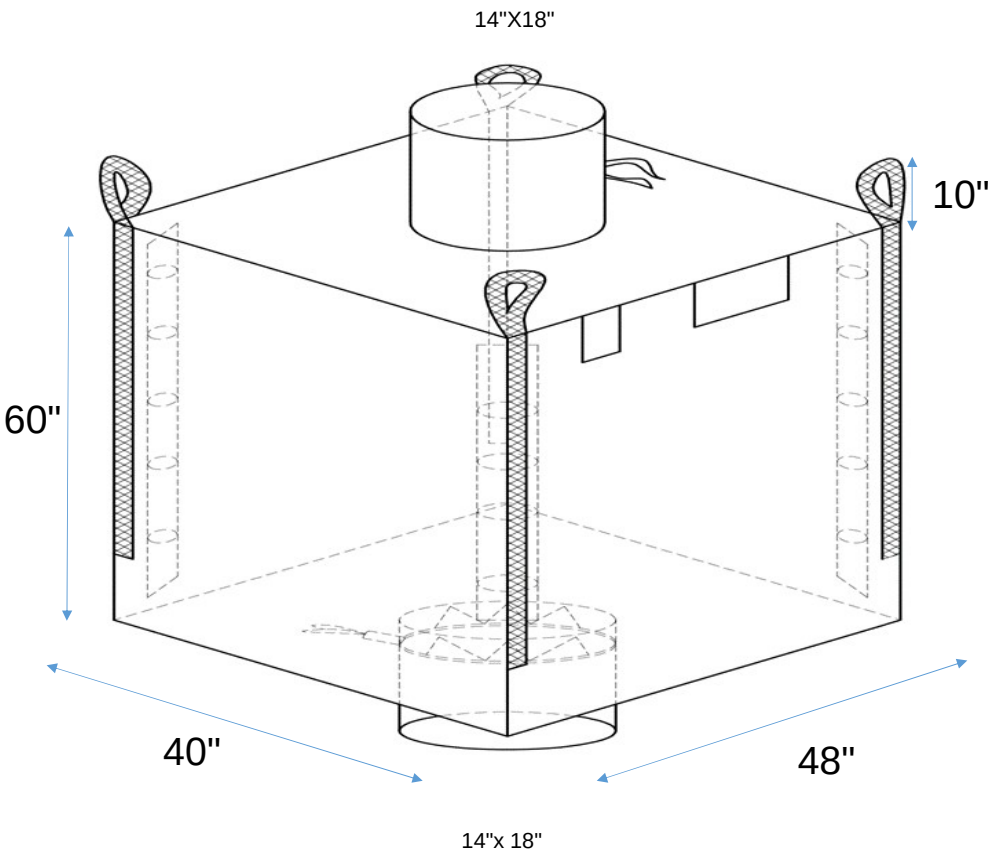

Bag Dimensions:	40"x48"x60" (Inner Size - LxWxH)
Safe Working Load/Safety Factor:	3000 lbs. 5:1
Bag Construction:	4-Panel bag with Baffles
Body Fabric:	5 oz. (170 gsm) Uncoated
Top:	Spout, 14" Diameter x 18" Height
Top Fabric:	3 oz. Coated
Top Tie:	PP Raffia Tie Strings
Bottom Spout:	14" Diameter x 18" Height
Bottom Spout Fabric:	3 oz. Coated
Bottom Spout Tie:	PP Rope
Bottom Closure:	Iris Closure
Bottom Closure Tie:	PP Rope
Baffles:	4 Corner Baffles, 120 gsm + 20 gsm Coated
Lifting Loops:	4 Corner Loops, 10" Free Height & 2" Width
Sift Proof Seams:	No
Document Pouch:	12"x16" Ziplock
Seams:	Over-lock Plus Safety
Safety Label:	Yes